DO NOT SCALE - IF IN DOUBT, ASK

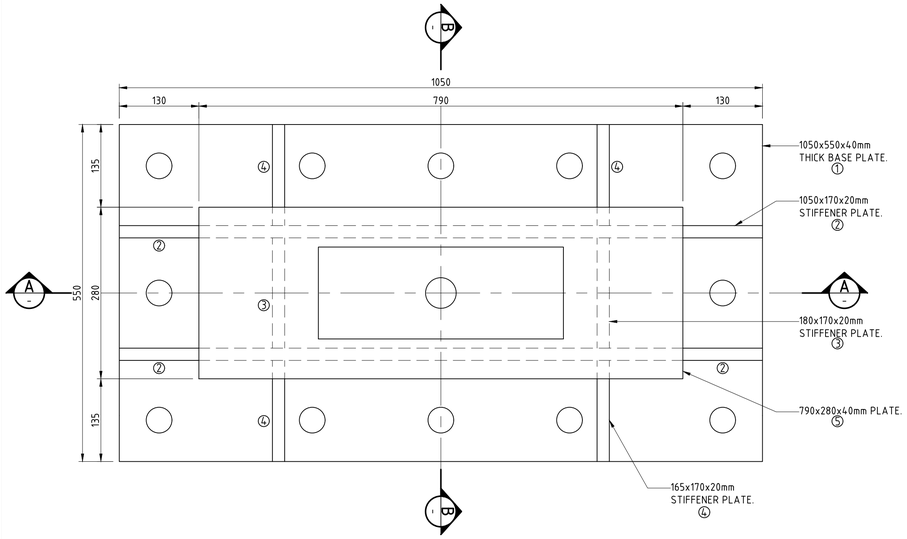

PLAN VIEW: STORM PIN ANCHOR
1:5

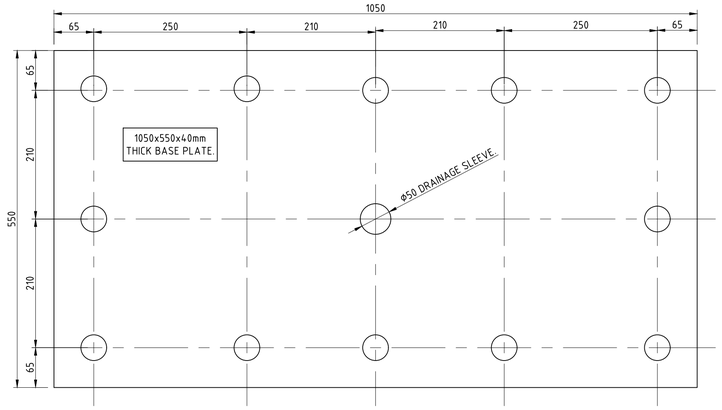

ITEM 1: BASE PLATE
1:5

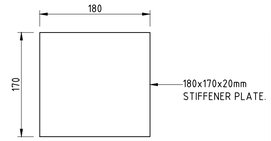

ITEM 3: STIFFENER PLATE
1:5

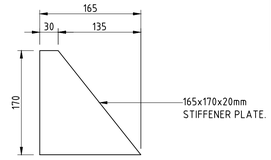

ITEM 4: STIFFENER PLATE
1:5

NOTES

1. FABRICATION:

1.1. AFTER FABRICATION, THE WHOLE ASSEMBLY IS TO BE COATED WITH A ZINC COATING APPLIED BY THERMO-DIFFUSION COATING (SHERARDIZING) IN ACCORDANCE WITH BS EN:13811:2003.

1.2. H.D. BOLT FABRICATED FROM EN57 SHAFT HEAT TO BE TREATED TO CONDITION OF BS 970:PART 1.

1.3. ALL PLATES TO BE GRADE S355JR.

2. WELDING:

2.1. ALL WELDS FOR ANCHOR, TO BE ALL ROUND 12MM FILLET WELDS UNLESS OTHERWISE NOTED.

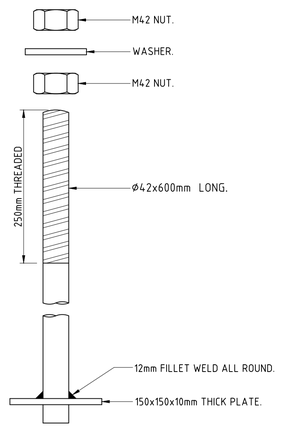

ITEM 6: HOLDING DOWN BOLTS
1:5

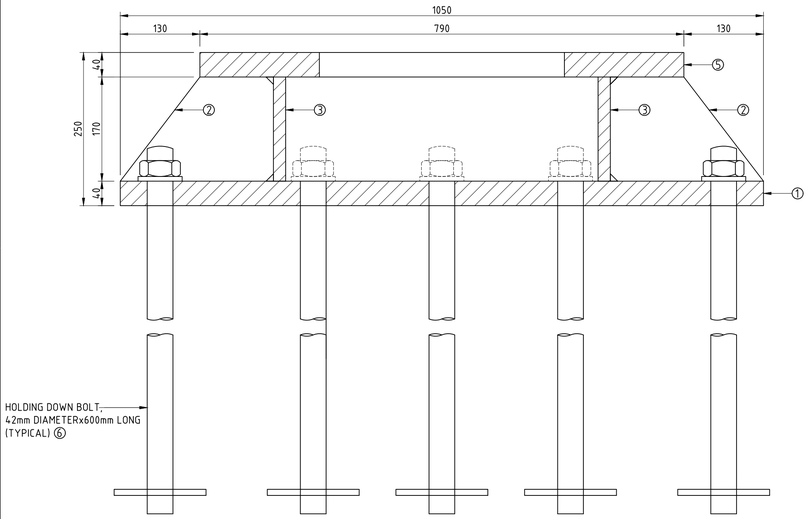

SECTION A
1:5

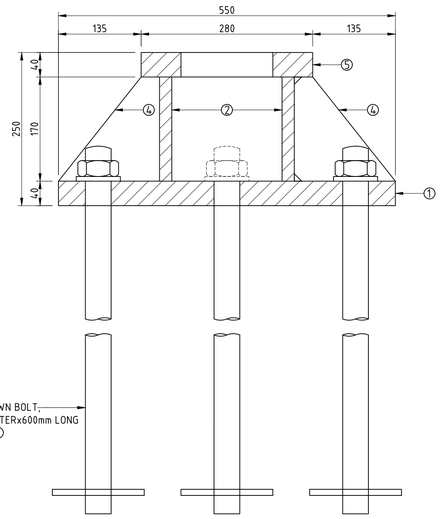

SECTION B
1:5

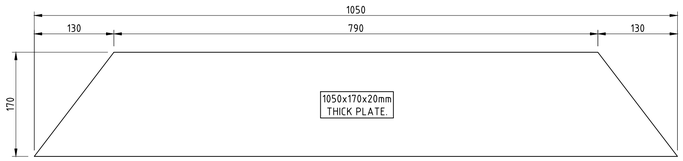

ITEM 2: STIFFENER PLATE
1:5

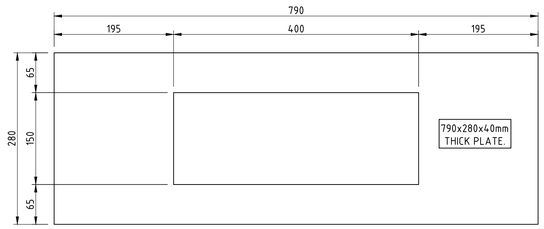

ITEM 5: TOP PLATE
1:5

MATERIAL LIST

	ITEM	DESCRIPTION	DIMENSIONS	No OFF PER ITEM	MASS/ITEM (kg)	TOTAL MASS (kg)	
SEA SIDE (32 NUMBER OFF)	ITEM ①	BASE PLATE	1050 x 550 x 40 PLATE	1	181,34	181	
	ITEM ②	STIFFENERS	1050 x 170 x 20 PLATE	2	24,56	50	
	ITEM ③	STIFFENERS	180 x 170 x 20 PLATE	2	4,8	10	
	ITEM ④	STIFFENERS	165 x 170 x 20 PLATE	4	2,6	11	
	ITEM ⑤	TOP PLATE	790 x 280 x 40 PLATE	1	50,62	51	TOTAL MASS PER MASS CAPPING
	ITEM ⑥	ANCHOR BOLT	Ø42 BOLT WITH NUT AND WASHER 600 LONG	12	6,52	78	381 kg
LAND SIDE (32 NUMBER OFF)	ITEM ①	BASE PLATE	1050 x 550 x 40 PLATE	1	181,34	181	
	ITEM ②	STIFFENERS	1050 x 170 x 20 PLATE	2	24,56	50	
	ITEM ③	STIFFENERS	180 x 170 x 20 PLATE	2	4,8	10	
	ITEM ④	STIFFENERS	165 x 170 x 20 PLATE	4	2,6	11	
	ITEM ⑤	TOP PLATE	790 x 280 x 40 PLATE	1	50,62	51	TOTAL MASS PER CRANE BEAM
	ITEM ⑥	ANCHOR BOLT	Ø42 BOLT WITH NUT AND WASHER 600 LONG	12	6,52	78	381 kg

DRAWING NO.	REFERENCE
1785-CO-110-C-DWG-0007-01	STORM PIN & TIE-DOWN ANCHOR LAYOUT
1785-CO-110-C-DWG-0003-03	QUAY FURNITURE PHASE 3 (BERTH 203)
1785-CO-110-C-DWG-0002-02	QUAY FURNITURE PHASE 2 (BERTH 204)
1785-CO-110-C-DWG-0002-01	QUAY FURNITURE PHASE 1 (BERTH 205)

REFERENCE DRAWINGS

Engineers

ZAA ENGINEERING PROJECTS & NAVAL ARCHITECTS

P O Box 26546
HOUT BAY 7872
Tel: +27(21) 791 9100
E-Mail: zaaepna@zaaepna.com

31 Melkhout Crescent
Hout Bay 7806
Fax: +27(21) 790 4470

PROJECT NO	DIS CODE	AREA	DISP	TYPE	DRG NO	SHEET	STATUS	REV
1785	CO	110	C	DWG	0007	02	T	0A

NO.	DESCRIPTION	BY	CHK'D	APP'D	DATE
0A	ISSUED FOR TENDER	AS	MC	JZ	2019.07.26

REVISIONS / ISSUE AUTHORIZATION

This Document including all design and information therein is Confidential Intellectual Property of ZAA Engineering Projects and Naval Architecture (Pty) Ltd.' Copyright and all other rights are reserved by ZAA. This Document may only be used for its intended purpose.

EPCM CONSULTANT: TNPA

TITLE	NAME	SIGNATURE	DATE
LEAD DES. ENG.			
ENG. COORD.			
ENG. MANAGER			
AREA MANAGER			
PROJECT MGR.			
DIVISION			

DIV.	TITLE	NAME	SIGNATURE	DATE

ORIGINATOR: ZAA

TITLE	NAME	SIGNATURE	DATE
DRAWN	AS	AS	19 07 26
CHECKED	MC/WvW	MW	19 07 26
ENG. COORD.			
DISCIP. ENG.			
ENG. MANAGER			
AREA MANAGER			
PR.ENG. / PR.TECH.			
NAME	J. ZIETSMAN		DATE
SIGNATURE	J. Zietsman		19 07 26
REG. NUMBER	760293		
SCALE :	AS INDICATED		A1

Transnet National Ports Authority
237 MAHATMA GANDHI ROAD
DURBAN
P.O. BOX 31683, DURBAN
TEL: 031 361 8852

TRANSNET

PORT OF DURBAN

DCT BERTHS 203 to 205 RECONSTRUCTION
DEEPENING AND LENGTHENING

QUAY FURNITURE
STORM PIN ANCHOR
DETAILS AND INSTALLATION

PROJECT NUMBER	DV	FBS	DIS.	TYPE	DRG. NO.	SHT.	REV.	ID
212283	0	1	110	C	GA-1006	02	0A	AS